by MM Store
Specialist in Kinderkamers

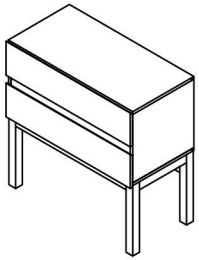

# ACCESSORIES LIST

| ACCESSORIE NO : 001 | ACCESSORIE NO : 317 | ACCESSORIE NO : 002 | ACCESSORIE NO : 004 | ACCESSORIE NO : 020 |
|---|---|---|---|---|
| MİNİFİX MİL 6 MM | 10'LUK MİNİFİX MİL | TİTUS MİNİFİX GÖVDE | ⌀8x30 KAVELA | MİNİFİX TAPA |
| | | | | |
| 14 ADET | 22 ADET | 36 ADET | 26 ADET | 8 ADET |

| ACCESSORIE NO : 351 | ACCESSORIE NO : 120 | ACCESSORIE NO : 406 | ACCESSORIE NO : 114 | ACCESSORIE NO : 538 |
|---|---|---|---|---|
| TANDEM RAY 400 (SAMET) | 6.3*13 MM EURO VİDA | PLS. RAF PİMİ EURO VİDALI | M6*15 YSB VİDA | M90 AYAK BAĞLANTI DEMİRİ |
| 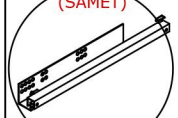 | | 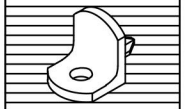 | | 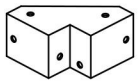 |
| 2 TAKIM | 12 ADET | 4 ADET | 24 ADET | 4 ADET |

| | | | ACCESSORIE NO : 091 | ACCESSORIE NO : 011 |
|---|---|---|---|---|
| | | | KABİN VİDASI (50mm) | ARKALIK SABİTLEME 3.5x25 S.VİDASI |
| | | | | 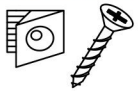 |
| | | | 4 ADET | 8 ADET |

YEDEK AKSESUAR SİPARİŞLERİNİ RESME BAKARAK VERİNİZ. (Örn:ACCESSORIE.NO:008 - RAFİX MİL - 1 Ad.)
PLEASE ORDER THE ACCESSORIES ACCORDING TO THE REFERENCE NUMBER ON THE DRAWING(EXAMPLE ACCESSORIE NO-008 RAFIX MIL 1.PCS.)

# PARTS LIST

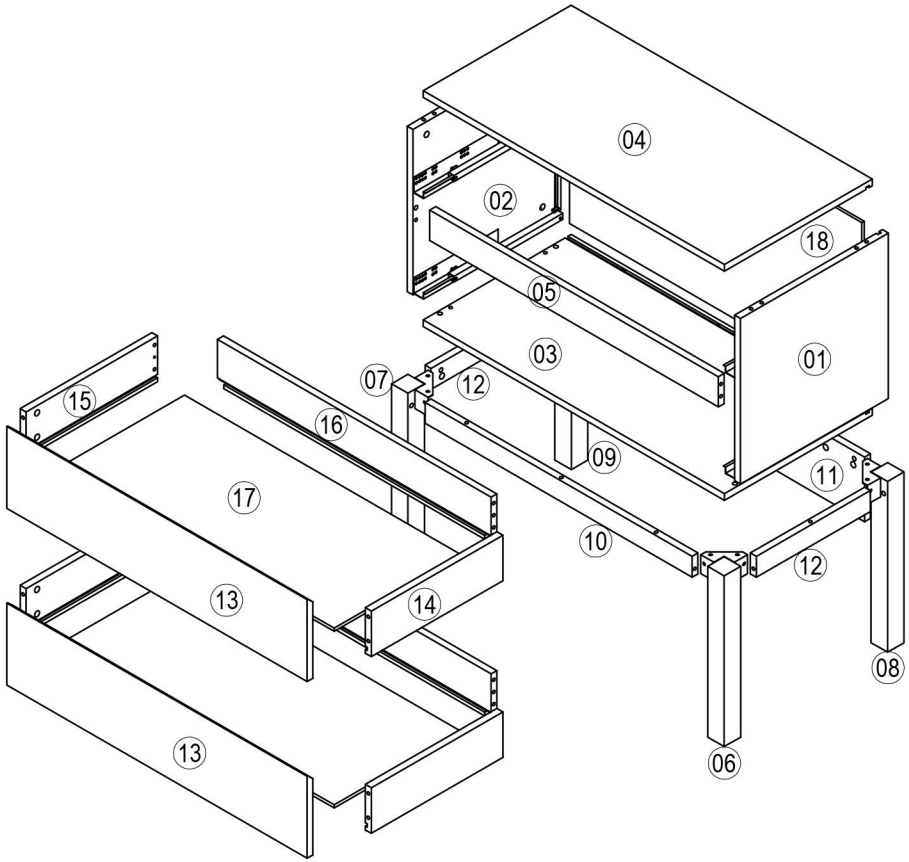


FR-002

| NO | ADET/PCS | | NO | ADET/PCS | | NO | ADET/PCS | |
|---|---|---|---|---|---|---|---|---|
| 01 | 1 | | 11 | 2 | | | | |
| 02 | 1 | | 12 | 2 | | | | |
| 03 | 1 | | | | | | | |
| 04 | 1 | | | | | | | |
| 05 | 2 | | | | | | | |
| 06 | 1 | | | | | | | |
| 07 | 2 | | | | | | | |
| 08 | 2 | | | | | | | |
| 09 | 2 | | | | | | | |
| 10 | 2 | | | | | | | |

YEDEK PARÇA SİPARİŞLERİNİ RESME BAKARAK PARÇA NUMARASINA GÖRE VERİNİZ
PLEASE ORDER THE SPARE PARTS ACCORDING TO THE REFERENCE NUMBER ON THE DRAWING

# INSTALLATION STEPS

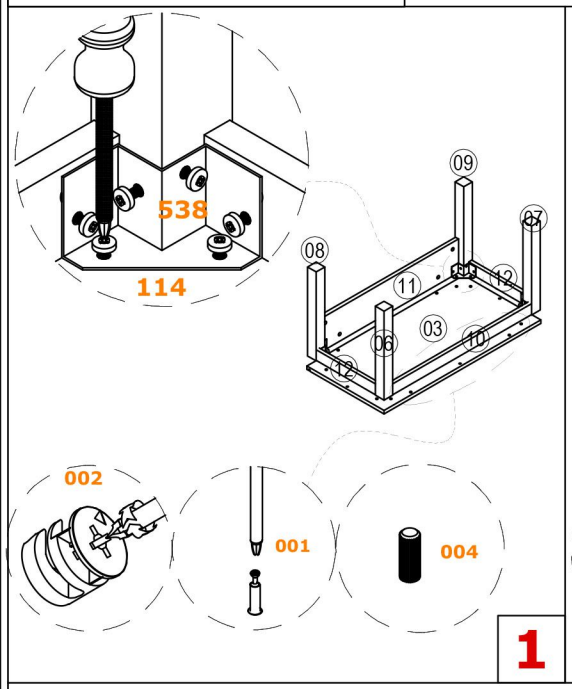


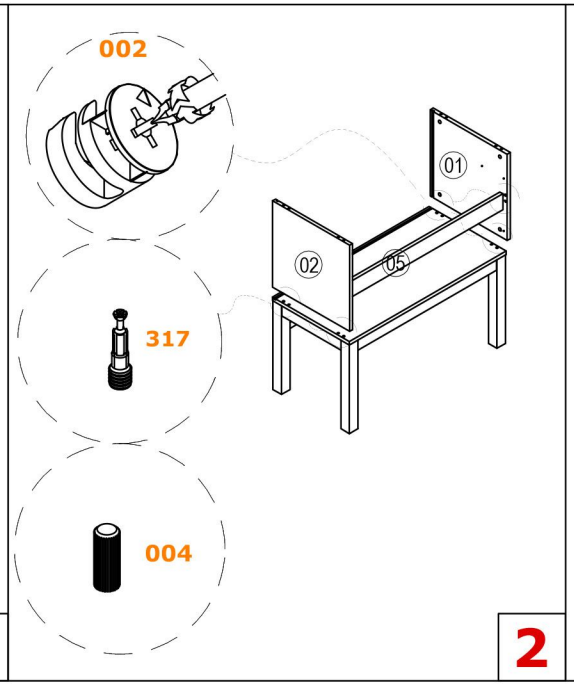


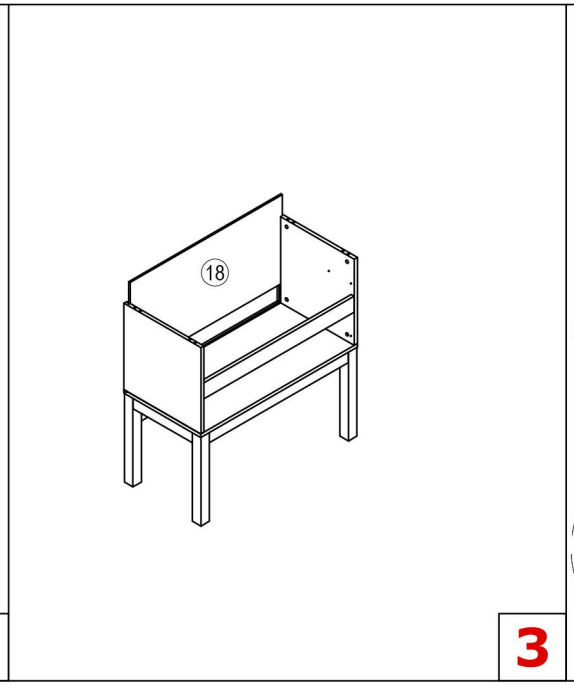


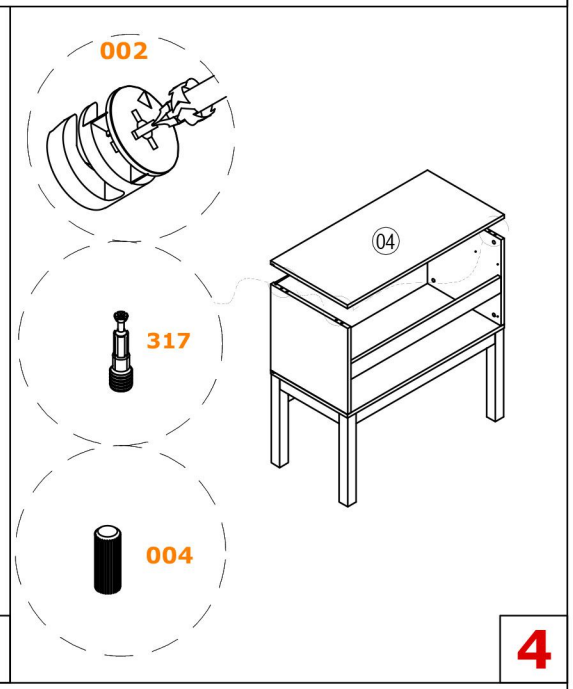


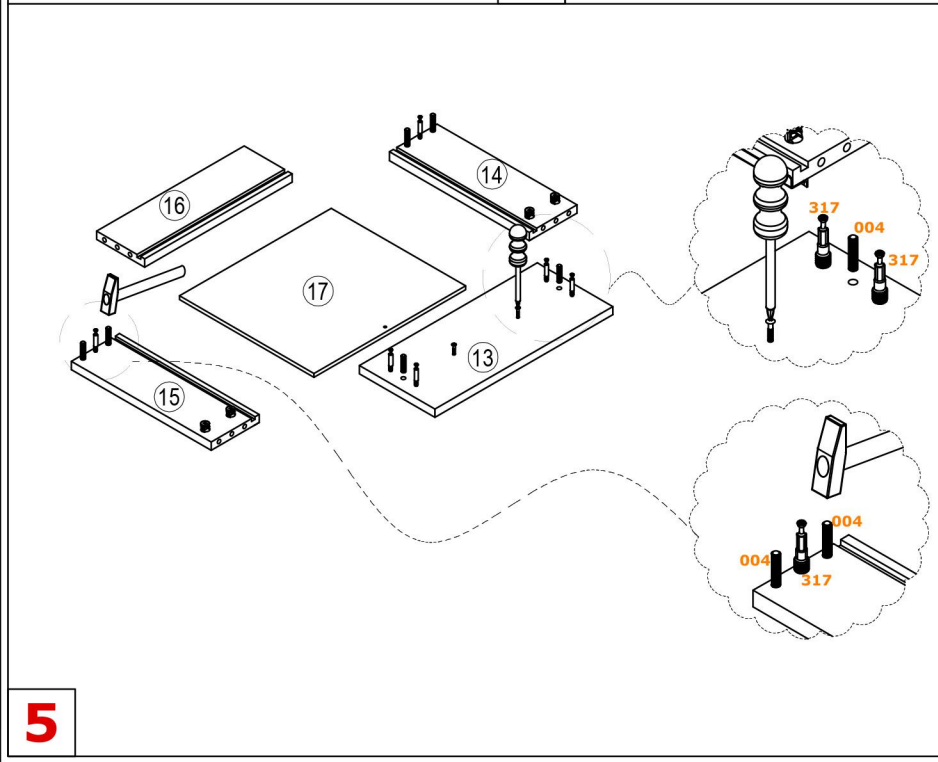


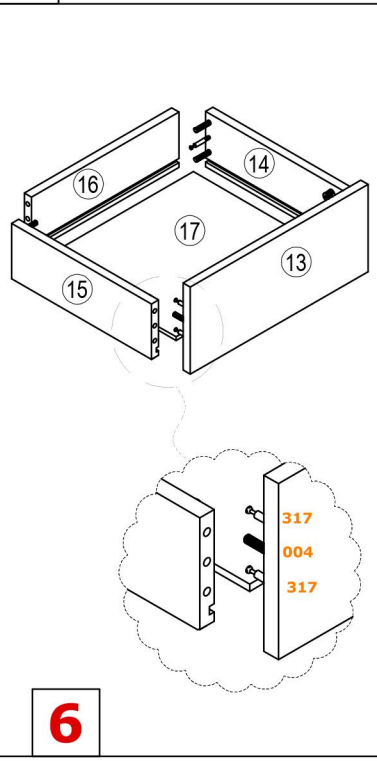


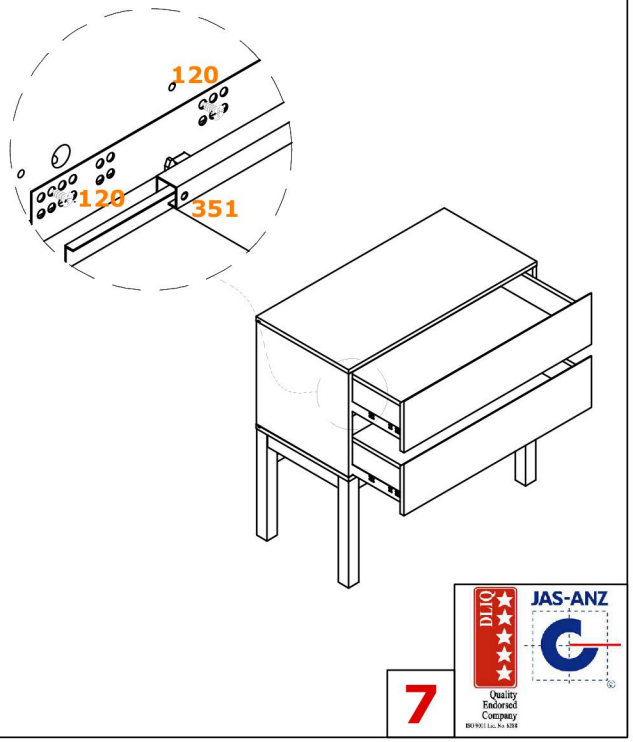


JAS-ANZ
Quality Endorsed Company