by MM Store
Specialist in Kinderkamers

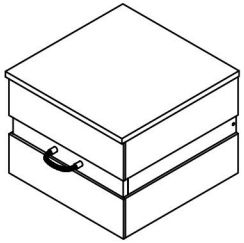

ACCESSORIES LIST

ACCESSORIE NO : 317	ACCESSORIE NO : 002	ACCESSORIE NO : 004	ACCESSORIE NO : 021	ACCESSORIE NO : 092
10'LUK MİNİFİX MİL	TİTUS MİNİFİX GÖVDE	⌀8x30 KAVELA	DÜZ MENTEŞE	4*18 MM S. VİDASI MENTEŞE İÇİN
			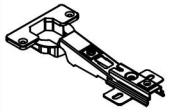	
10 ADET	10 ADET	8 ADET	2 ADET	8 ADET

ACCESSORIE NO : 115	ACCESSORIE NO : 539	ACCESSORIE NO : 092	ACCESSORIE NO : 075	ACCESSORIE NO : 020
M4*23 MM VİDA	PALERMO KULP	4*18 MM S. VİDASI	KÜÇÜK TEKER	MİNİFİX TAPA
2 ADET	1 ADET	8 ADET	4 ADET	8 ADET

YEDEK AKSESUAR SİPARİŞLERİNİ RESME BAKARAK VERİNİZ. (Örn:ACCESSORIE.NO:008 - RAFİX MİL - 1 Ad.)
PLEASE ORDER THE ACCESSORIES ACCORDING TO THE REFERENCE NUMBER ON THE DRAWING(EXAMPLE ACCESSORIE NO-008 RAFIX MIL 1.PCS.)

PARTS LIST

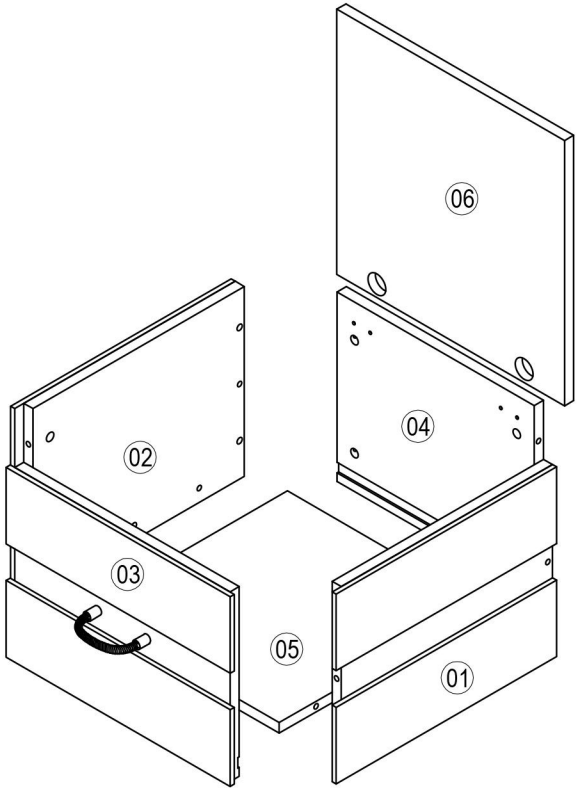

FR-002

NO	ADET/PCS		NO	ADET/PCS		NO	ADET/PCS	
01	1							
02	1							
03	1							
04	1							
05	1							
06	1							

YEDEK PARÇA SİPARİŞLERİNİ RESME BAKARAK PARÇA NUMARASINA GÖRE VERİNİZ
PLEASE ORDER THE SPARE PARTS ACCORDING TO THE REFERENCE NUMBER ON THE DRAWING

INSTALLATION STEPS

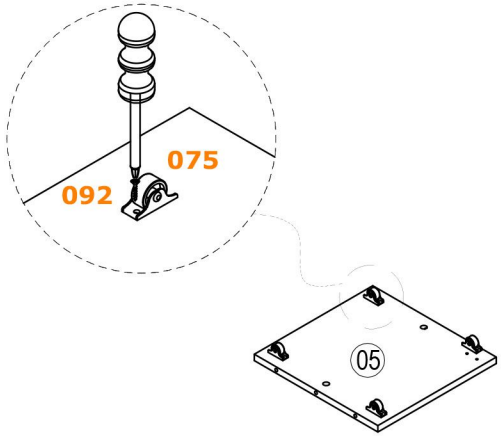

1

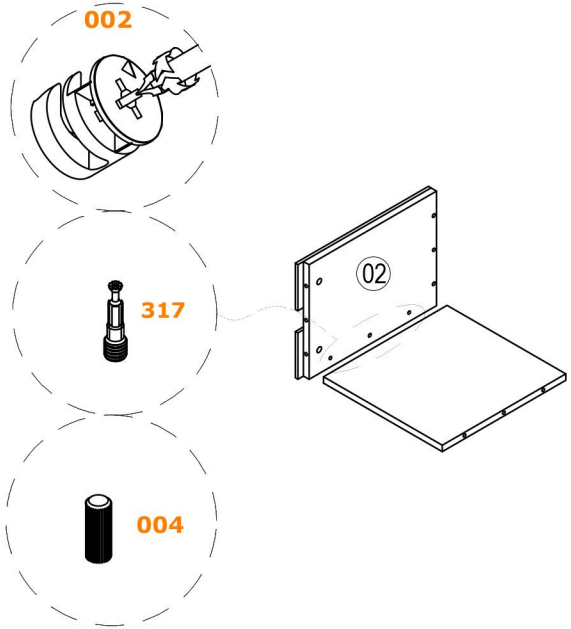

2

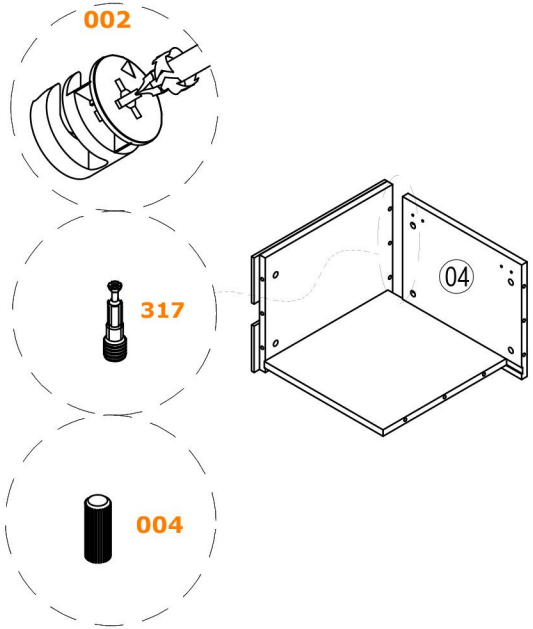

3

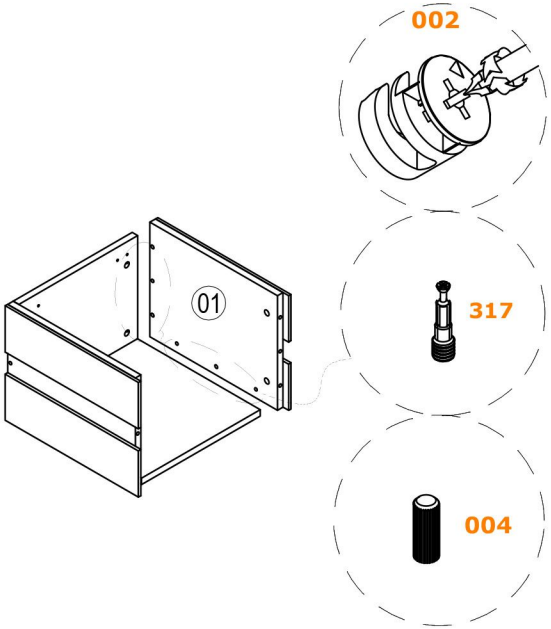

4

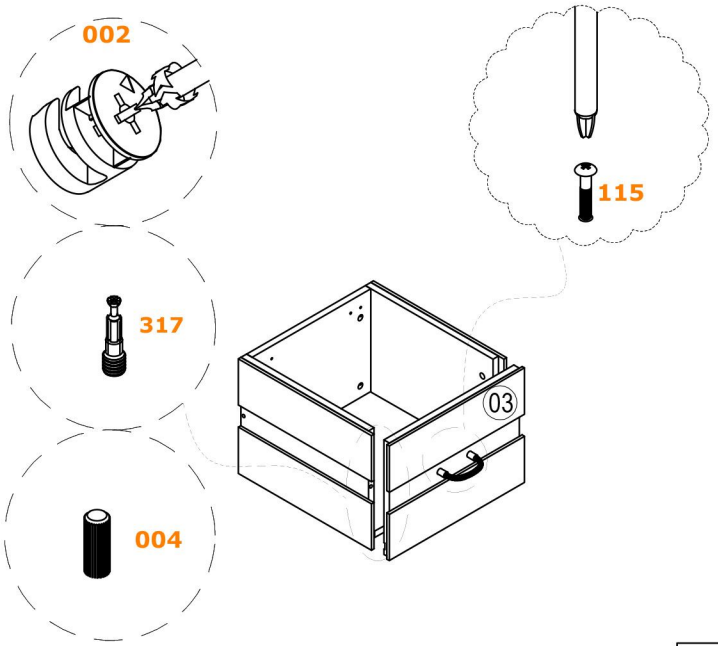

5

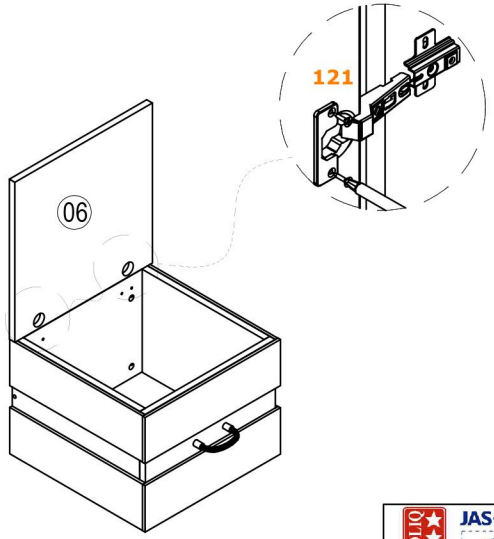

6

JAS-ANZ
Quality Endorsed Company